SMF1 Welding Controller

Instruction Manual

V 1.2

Contents

I. Introduction

Inverter Resistance Welding Controller Advantages

As the graphs imply, our middle frequency welding control can output current in DC. Therefore, in using our welding controller, your welding process can be easier to control, your welding can be quicker, and your welding process can be more stable. The welding frequency of this machine is 1 kHz, so with a 50 Hz power source, the electric current adjustment process is faster and more accurate. So just as these graphs show, our middle-frequency welding control can control the electric output stably.

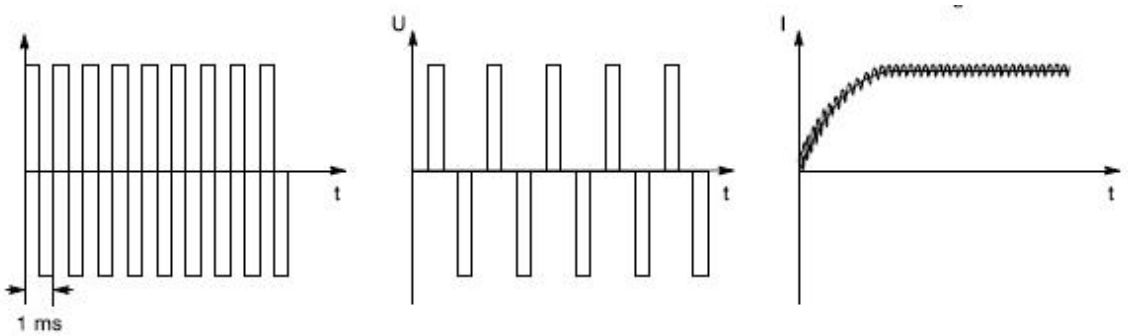

With regards to the general welding control, our middle frequency inverter resistance welding control system is more advantageous in the following areas:

1. The secondary welding circuit flow is in DC current. Therefore, due to this close connection for your weld project, the different degrees of depth produces the induction reactance of the secondary circuit that will allow your electric current weld to be more stable and its fluctuation greatly reduced.
2. The weight of your required transformer can be greatly reduced.
3. Your electrode life can be longer.
4. Includes the ability to weld aluminum and zinc plated metal materials, etc., and its weld result is good.
5. Is especially well suited for welding three-layered sheet metal, extremely thin materials, and very precise welds as required.
6. Creates fewer projectiles.
7. With our machine controls its electric current, the resulting quality of your spot weld will be improves greatly.

II. Components of the Control System

As the picture identifies, the components of the whole system includes a welding controller, a middle-frequency transformer, and your required components. Specifically, within the welding controller there contains more parts, such as a power driver, a rectifier diode, a capacitor, IGBT, and a central control component (Main-board).

Welding Control Main features:

1.Power source output frequency: 1 kHz, with accuracy to the millisecond.

2.Can program up to 64 welding schedules.

3.Three section heating process: preheat, weld, and reheat; during the welding section process it is possible to set the welding control to increase heat gradually or decrease heat gradually.

4.Has the capacity to program pressure controls, and can define at most 10 pressure sections.

5.Has the capacity to program I/O output: within this, it can program 3 output sections, is more compatible with PLC, and can also program robot.

6.Has a weld count function.

Technical parameters:

1.Voltage input: 3-phase 380V, 50 Hz/60 Hz, electric power source with a +10%, -20% fluctuation allowance.

2.Voltage output: Single phase PWM output 500V.

3.Electric current output: When the duty cycle is no more than 10%, depending on the control model, the maximum electric current output is 400A, 800A, 1200A,1600A, 2400A, 2800A.

4.Coolant: minimum flow rate

4L/MIN(SMF1-400),8L/MIN(SMF1-800),12L/MIN(SMF1-1200),14L/MIN(SMF1-1600),18L/MIN(SMF1-2400),18L/MIN(SMF1-2800),temperature ≤30℃, coolant temperature and room temperature can not differ more than 10℃

5.Operating temperature: 0~50℃.

6.Air valve specification: DC 24V.

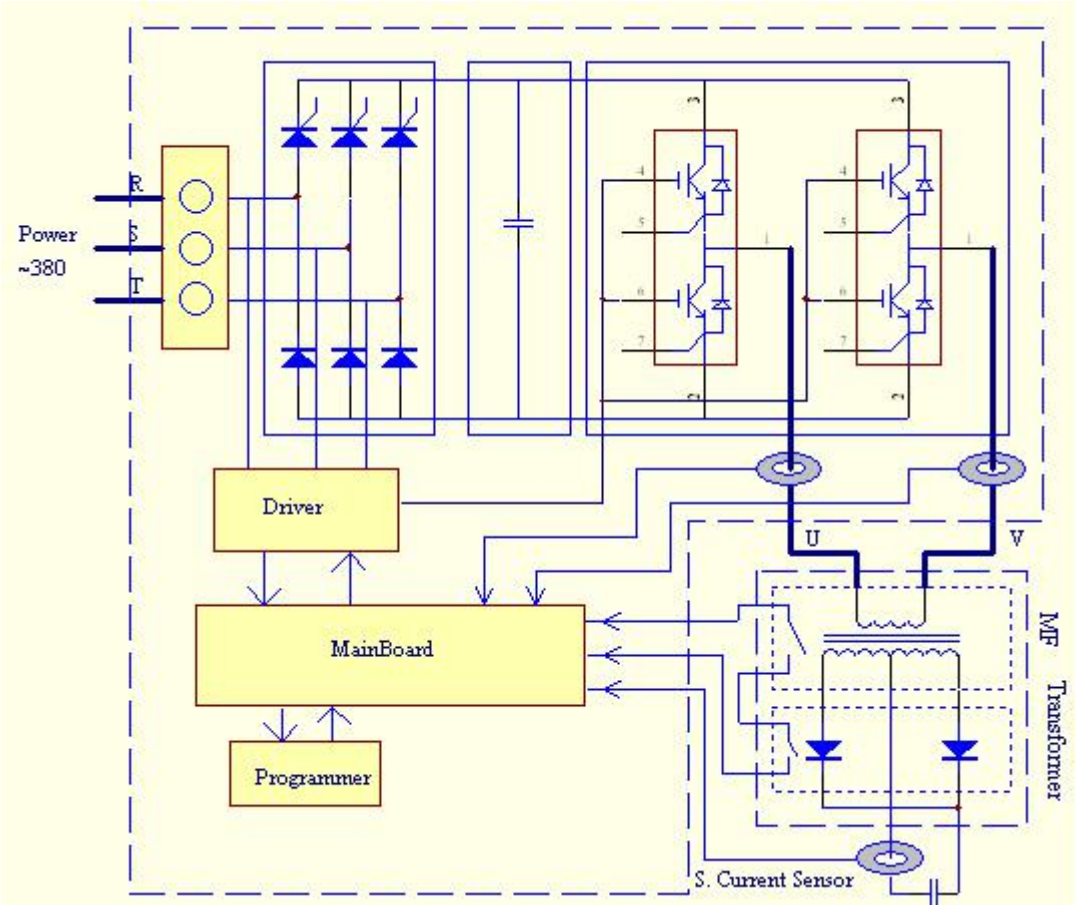
Power
~380
R
S
T
Driver
MainBoard
Programmer
U
V
MF Transformer
S. Current Sensor

III. Weld Control Functions

Our control system has two possible functions: general spot welding and seam welding.

1. Spot welding: After the activation signal turns on, the welding process begins immediately, and when the welding process is complete it will generate a signal to indicate completion. In all our control systems there is a standard parameter set to “prohibit initiation”, that permits or prohibits the process to start, when this parameter is ON it will not allow the use of the welding operation; when this parameter is OFF the user is able to use the welding control system. The picture below shows the time sequence for the spot welding process:

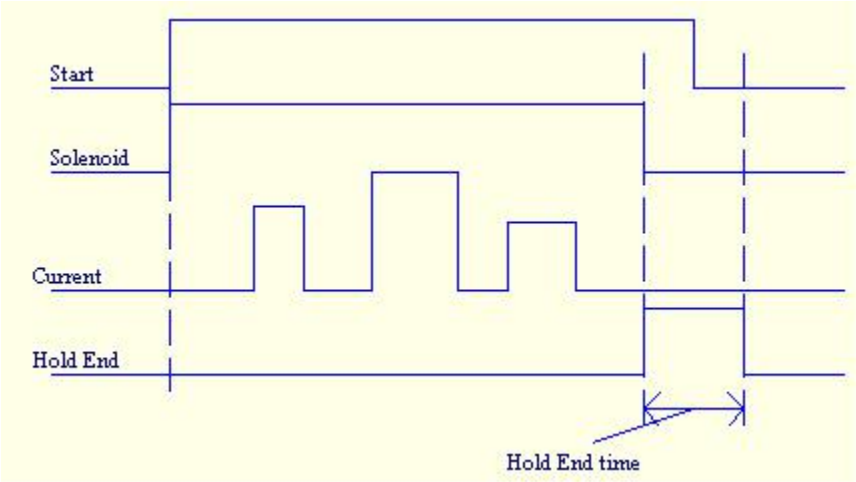

2. Repeated spot welding: during the process of repeated spot welding, if Start signal is on, the solenoid valve will discontinue weld after the holding time, the welding clamp will open, and begin the OFF time. After the OFF time is completed, the solenoid valve will close, and resume the next welding process. The following picture will show the working time process for Repeat spot welding.

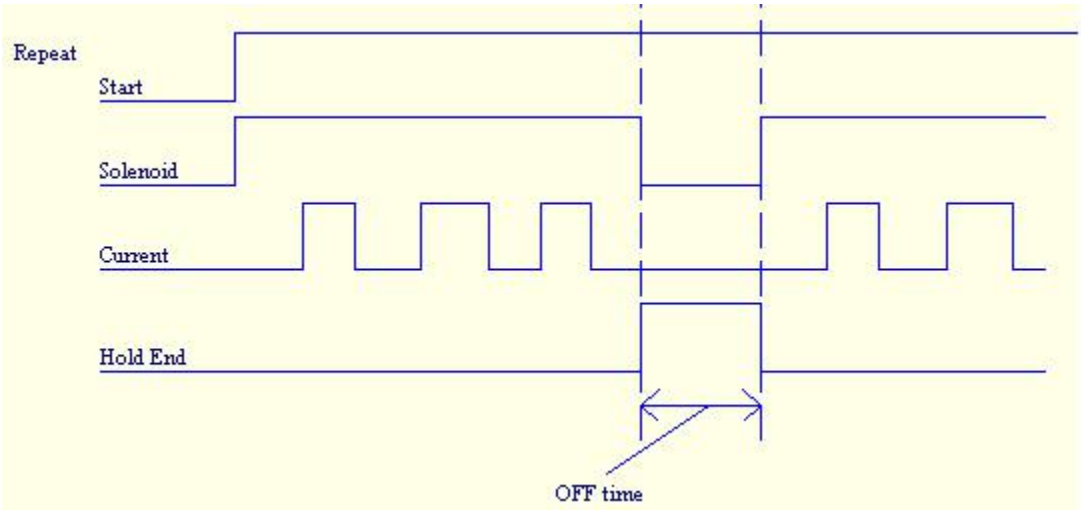

3. Seam welding: Normal start Seam & Pulse Start Seam

1) Normal Start Seam (Pulse Start OFF): According to this mode, the second pulse output circulates to form the seam weald process, based on the seam welding wheel, the electric current outputs continuously until the start signal is disconnected, then the welding process concludes. The following picture will show the working time process for seam welding.

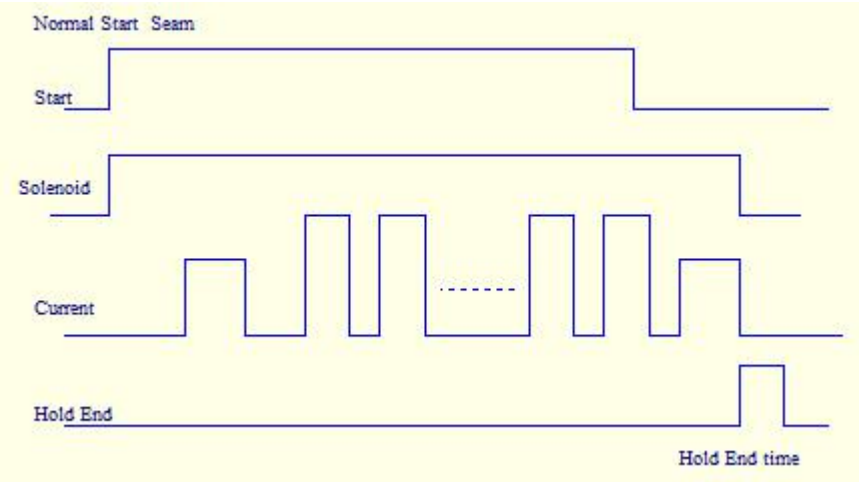

2) Pulse Start Seam (Pulse Start ON): According to this mode, the first start, the electric current outputs continuously; the second start, the welding process concludes.

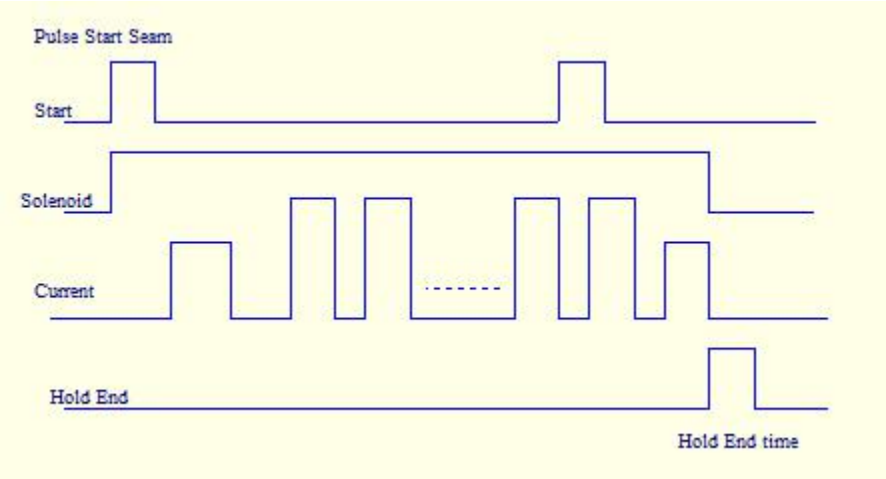

When working in the seam mode, the second pulse can be switched at any time the current value of four different.

X11-2	X11-3	
OFF	OFF	Welding current (2. HEAT)
OFF	ON	Seam 2 current
ON	OFF	Seam 3 current
ON	ON	Seam 4 current

IV. Programming Console Manual

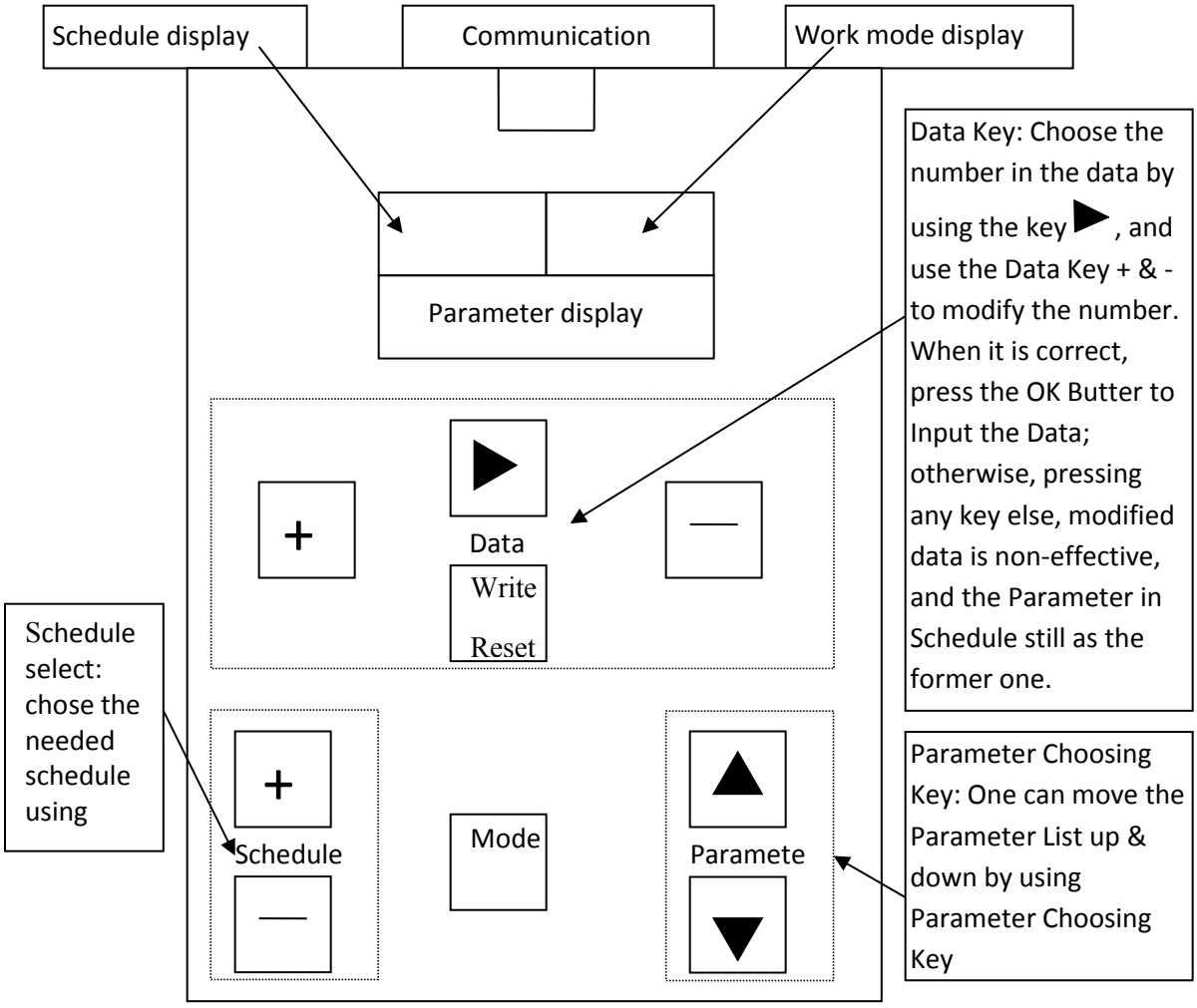

The welding controller can operate under several modes as follows, which can all be selected by the "Mode' button on the user interface to allow the change of the different modes of operation:

1) Welding mode (WELD): Under this mode the welding control operates normally, with actual welds.

2) Test mode (TEST): Under this mode, the welding control only allows outward movement and no actual welding current output.

3) Programming mode (PROG): Under this mode, the parameters of the welding control can be programmed

4)Monitor mode (MONI): Under this mode, the user can manually advance each step in order to check for accuracy and investigate possible problems in the welds.

Schedule Selection Method

Two method: terminal selection and programming console selection

S8 （DIP Switch）in the Main-board set to ON , “SYSTEM KEYWORD” set to 2010.

Terminal selection: the parameter “Schedule Selection ”set to 0000;

Programming console selection: the parameter “Schedule Selection” set to 1111;

1)Terminal selection: program by changing the parameter “0 AS 1”, adjust the terminal with schedule correlation. “SYSTEM KEYWORD” set to 2010.

“ 0 AS 1” set to 0000 or 1111, the relations between the schedule selection terminal and the starting schedule ,please see Appendix.3.

NOTE: Must be that the parameter “START INHIBIT” set to OFF.

2)programming console selection: Must be that the parameter “START INHIBIT” set to OFF, or the starting schedule is the last schedule that the parameter “START INHIBIT” set to OFF.

NOTE: When setting complete, please close S8.

V. Functions Set Up

1、The meanings behind the parameters S1, S4 S5, S6, S7, S8 are as follows:

	ON	OFF
S1	The secondary-sensors are installed	The secondary-sensors are not installed.
S4	Allow for expanding of surveillance parameters.	The surveillance parameters are set to conventional
S5	Seam welding	General spot welding
S6	Warning alarm stops welding process	Warning alarm does not stop welding process
S7	The primary current feedback is effective	If the secondary sensor is installed, then secondary current feedback is effective; if the secondary sensor is not installed, the primary current feedback is effective.
S8	System parameters allows for input, restricted only by the equipment manufacturer.	

2、The signals of S2, S3 can be selected to adapt to the pressure required for various modes.

	S3	S2
0~10V	OFF	OFF
0~10V	OFF	ON
4~20 m A	ON	OFF
0~20 m A	ON	ON

VI. Electric Current Step Increase, Tip Dress

In order to compensate for the current reduction produced by electrode wear and tear, our welding control offers a current stepper function. The user can set at most 10 steps according to the current situation. This function involves the following parameters: current increment, tip dress count, current stepper increment, Step welding count, Step end notice.

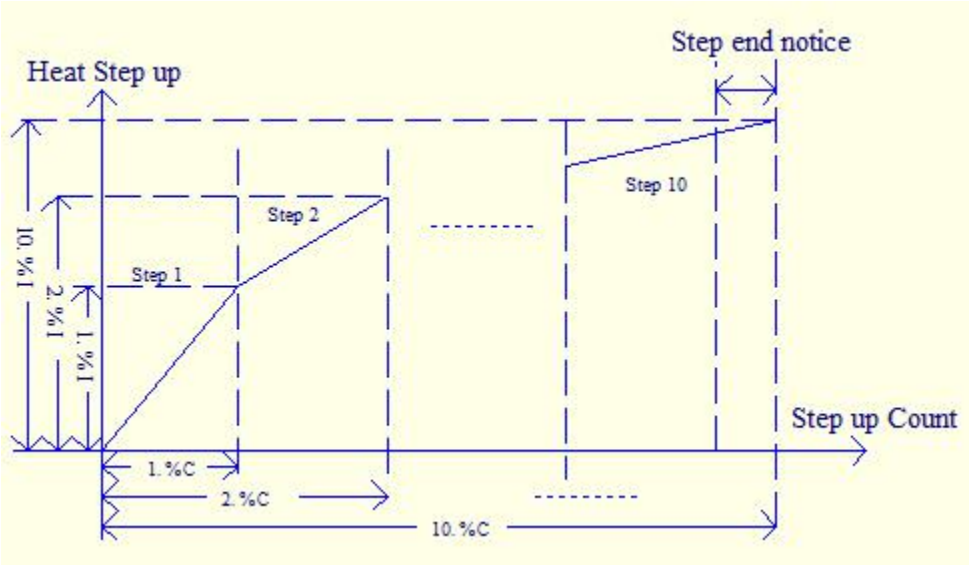

1. Current increment (Heat step up): The process of increasing the current correlates to the electric current settings for the total current increase. Range 0-999.9%.

2. Step up count: the total weld count in the process of electric current step increases. Range 0-999.9%.

3. Current stepper increment: The percent of every step increase of the electric current of the total electric current increase (current increment). For example, the value of the Current Increment of Step 1 is 1% I, so the final value of Step 1 is (1 + Current Increment * 1 % I) * value of your weld electric current setting.

4. Current stepper welding count: The percent of the weld count within every "Current Step" of the total weld count of the Current Increment. For example, 1% C is the percent of the weld count from Step 1 to the total weld count. Therefore, the weld count of Step 1 = Tip Dress Increment * 1 % C.

5. Step end notice: During the last Tip Dress increment process, N-stops before completion it will inform the user that the process is about to finish.

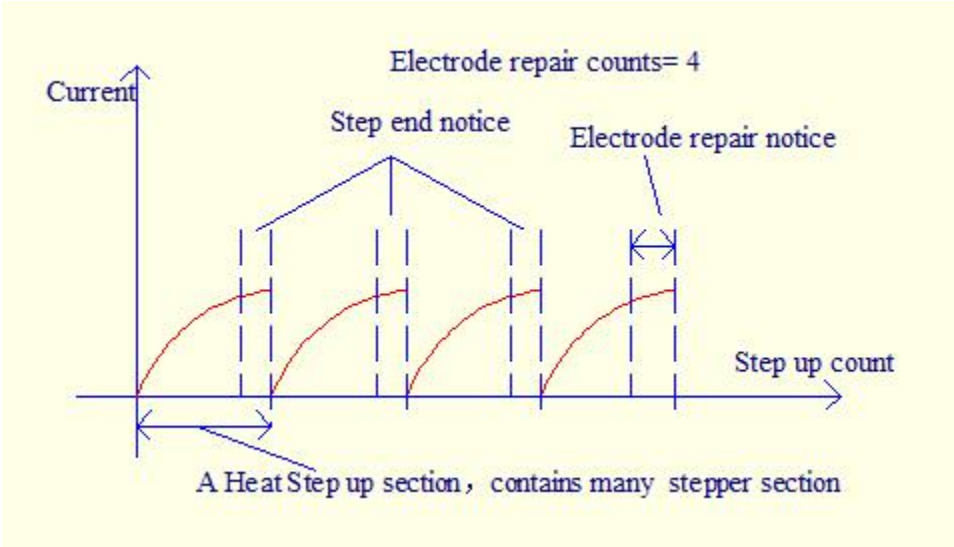

6. Electrode repair notice: During the last tip dress process, as it is about to terminate, N spot before the end it will raise a warning, namely the early electrode warning spot, its value range is 0-9999.

7. Electrode repair counts: The user can set the total number of times to tip dress, according to your required situation.

VII. Monitoring the Electric Current

The electric current monitoring function is used to inspect the actual current flow during the welding process, and will also feed back the value of the electric current together and the set reference value and the difference between these two values whether under or over, and will compare this value to the limiting value for the purposes of continuing the welding.

When the measured current value exceeds the allowed tolerance, the welding control will generate a report or set off a warning. If the measured current value is below the allowed tolerance, it will initiate a counter and compare, and if it is permitted to repair, then the controller will repair the weld once over the weld spot.

Then regarding each weld pulse, they can be individually set to monitor the electric current. When the measured value exceeds the set current tolerance, a report can be produced or a warning signal can be produced. Regarding preheating, welding, reheating, the three-step welding process, and the user must set up the following, current set value (Reference current), maximum value (I* heat limit+), set under limit value (I* heat P. limit-), and warning under limit value(I* heat A limit-). As the chart shows:

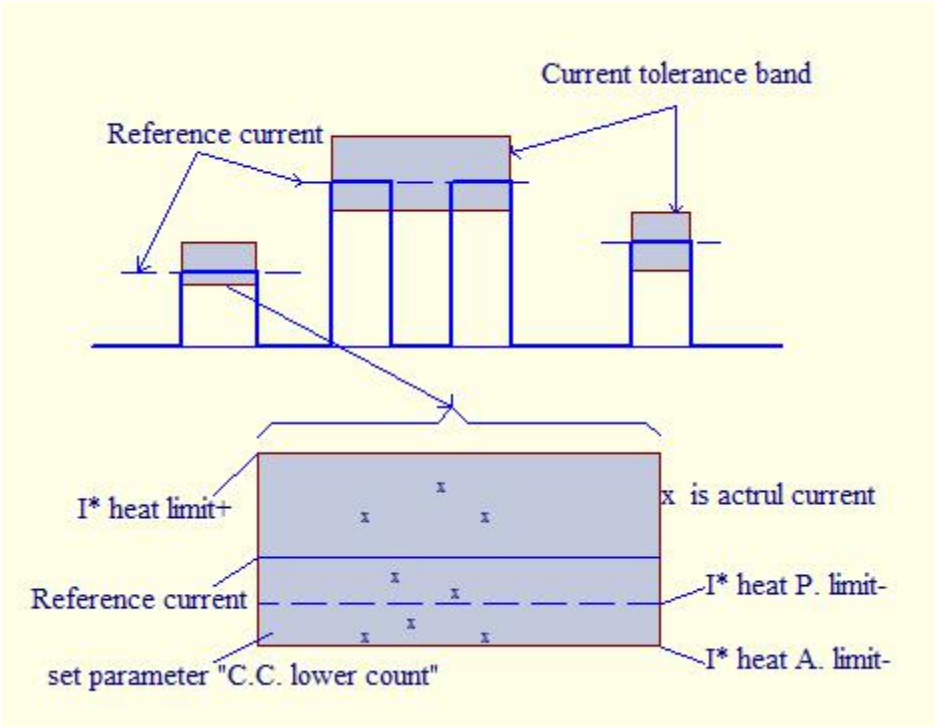

1. Preheating (welding or reheating) reference value: You can set up an actual electric current reference value, electric current exceed limit range, deficient limit range, all based on the parameters set by this reference value as the standard.

2. I * Maximum Value: With regards to the current I* (* =1,2 or 3, corresponding to the three process of preheating, welding and tempering separately), the correlating over limit range has an upper limit, and when the actual electric current oversteps this limit, the welding control system can an alarm, it is possible for this welding control system to only raise an alarm and not discontinue the welding process, but is also possible to break off the welding process, this function makes it possible to bypass the motherboard S6 code switch settings.

3. I * value under warning limit: the measured electric current value correlating to the reference current value has an under tolerance limit, namely the warning under current value, when the electric current measurement value oversteps the permitted limit, it will post the report, and it can stop welding, not stop the welding, or restarting the weld.

4. I * value within limit: regarding the electric current reference value it is possible to set a permitted deficient limit value, it is also a percentage, between the value within the limit and the value under warning limit, it is also possible to add a parameter: continuous under limit weld count, namely it is possible to allow a continuous n-number of spots located between the value within limit and warning under limit value, if it exceeds n points after the alarm, it will stop the welding process.

5. Continuous under limit weld counts: when the actual electric current value falls between the under current warning limit and the under current limit, then it will permit another weld one more time, if the next weld still falls within in this range and doesn't overstep the "Continuous under limit weld count" range, then it also can again weld one more time, until it reaches the continuous under limit weld count setting, if the next spot still is limit deficient, then the weld control machine will report this.

VIII. Freely Program Output

All our welding packages include freely programmable signal output, which drives the output relay. This export signal can have at most three circuit break intervals, and can drive an external air valve coil or an additional external installation.

On/Off time: can program output during the period in which operating welding work time, beginning from the compression time to the sustained completion time, the user can configure up to three time periods, including the disconnecting time and connecting time.

When the entire programming time sum total surpasses the time between the compression and the sustained completion time, then the current output on/off signal will disconnect, and not have any conditional output. As the chart shows:

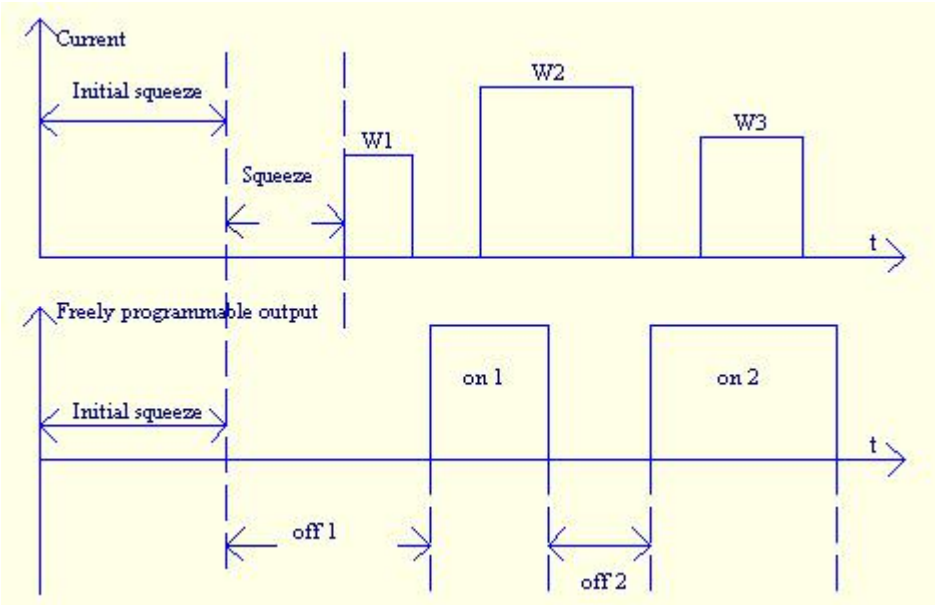

IX. Welding Pressure

A pressure curve can set up at most 10 sections; each section corresponds to a pressure and a time. The user can set the proportions of the valve's output according to the actual application circumstances.

1. Pressure-based values (Base Pressure): to set up pressure valve of the welding control machine when the machine is in standby mode, it is in proportion to the percent of maximum output pressure

   Actual output pressure = pressure based value * maximum output pressure proportional value

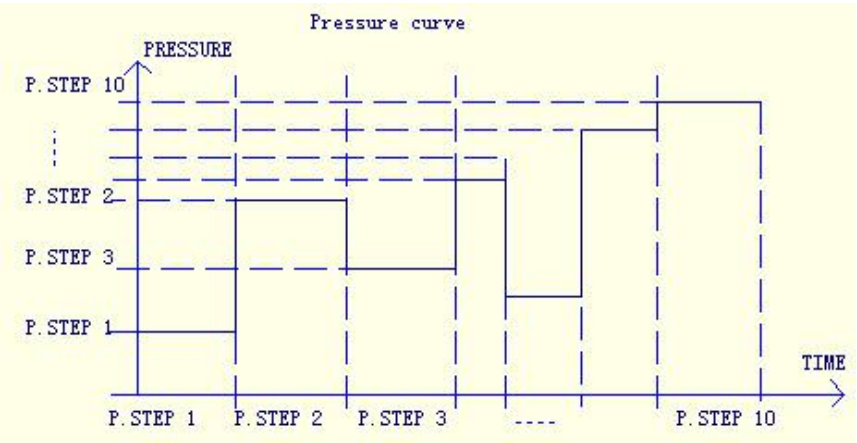

2. Pressure of Pressure Section 1: Pressure section 1 is relative to the maximum pressure percentage, in the same logic, every pressure section corresponds to one pressure value. It uses the "pressure-based value" as the standard scale for the maximum output pressure value.

3. Time of Pressure Section 1(P. Step 1 Time): the continuance pressure time of the pressure step increase section 1. Similarly, every pressure step increase corresponds to a time interval.

X. Counting Function

COUNT MONI and PRODUCT COUNT MONI

	Parameters name	Range	
145	COUNT MONI	0/1, 1:COUNT IS ON	no system keyword
146	MAX COUNT	1~9999	
147	PRODUCT CNT MONI	0/1,1：PRODUCT CNT MONI IS ON	
148	MAX PRODUCT	1~9999	
149	COUNT NOT ALARM	0/1, 0：COUNT ALARM,when the count is over,there has alarm output； 1：COUNT NOT ALARM,when the count is over,there hasn't alarm output	

COUNT MONI FUNCTION

When the COUNT MONI is on,COUNT MONI increase as welding spot, when the Monitoring Parameter WELD MONI COUNT≧MAX COUNT,output single COUNTER COMPLETE turn high,at the same time start inhibit the next time.

Only reset the alarm can start welding:you can turn the Counter/Production Reset input bit HIGH or reset the monitoring parameter WELD MONI COUNT .

When the COUNT MONI and PRODUCT CNT MONI are both on, WELD MONI COUNT=MAX COUNT,PRODUCT BTH COUNT increase 1,when the Monitoring Parameter PRODUCT BTH COUNT≧MAX PRODUCT,output single PRODUCTION COMPLETE turn high,at the same time start inhibit the next time.

Only reset the alarm can start welding:you can turn the Counter/Production Reset input bit HIGH more than 3s or reset the monitoring parameter PRODUCT BTH COUNT.

XI.Control System Troubleshooting

1. VALVE POWER LOWER! : Inspect whether the working air valve power source (X12 terminal 24V2) is normal.
2. INVERTER DRIVER MALFUNCTION: In the inverter drive process check if the IGBT component current flow or the corresponding drive circuit is not working properly.
3. HEAT SINK OVER HEAT! : the first, check if the temperature of the water flow through the heat sink is too high; the second, check if the temperature relay on the heat sink is damaged or not, in normal conditions its power switch is closed.
4. PRIMARY CURRENT UNNORMAL! : <1> inverter output current is too large, <2> the targeted intermediate frequency transformer is short-circuited, <3> the main board detection is abnormal.
5. CAPACTIOR VOL. UNNORMAL! : indicates the voltage in the capacitor has overstepped the ordinary scope, inspect whether the charge of the capacitor is normal; inspect whether the electric supply network is working stable.
6. +5V POWER HIGHER! , +15V POWER LOWER! , -15V POWER LOWER! : inspect the main board, check whether the working power supply is normal
7. TRANSFORMER OVERHEAT ! : check if the water temperature of the transformer is too high; check if the temperature relay in the transformer is damaged.
8. 24V MAIN POWER LOWER! : inspect if whether electric power source on the main board 24V (X2 terminal 24V1) is working normally.
9. CURRENT SENSOR SHORT! / CURRENT SENSOR OPEN! : inspect whether the secondary current is damaged; check if the current connections are in working order.
10. CURRENT HIGHER! : Indicates the actual current of the welding process overstepped the set limits of the monitor current, examine whether the parameter settings are correct, and if the welding process fits appropriately.
11. CURRENT LOWER! : Indicates the actual current of the welding process overstepped the set limits of the monitor current, examine whether the parameter settings are correct, and if the welding process fits appropriately, and whether the secondary circuit has a problem.

12. CONTINUOUS LOW CURRENT: Indicates the actual current of the welding process overstepped the set limits of the monitor current, examine whether the parameter settings are correct, and if the welding process fits appropriately, and whether the secondary circuit has a problem.

13. ELECTRODE REPLACE REQUEST: when the electrode life span is expired, replace electrode; after the electrode is replaced reset alarm signal or in X10 terminal input the electrode replacement signal.

14. ELECTRODE PEPAIR REQUEST: the request to polish the electrode, after the electrode is polished, reset the alarm or in X10 terminal input the electrode replacement signal.

15. ILLEGAL DATA: examine whether the welding initiating parameter settings has exceeded its boundaries.

16. CALIBATE COEFFICIENT!! : Main board has problems.

17. WATER PRESSURE UNNORMAL! / GAS PRESSURE UNNORMAL! : inspect whether water pressure and air pressure are normal; inspect whether the power source for the air valve 24V2 supplies electricity normally

18. START INHIBIT! : Current setting is already set up to prohibit the start up mode.

19. EMERGENCY STOP :alarm when the input terminal is off,when the input terminal is on,the alarm is clear

20. COMPLETE WELDING COUNTS:when the Monitoring Parameter WELD MONI COUNT≧MAX COUNT,there is a alarm in output terminals, you can reset the output terminals or reset the monitoring parameter WELD MONI COUNT .

21. COMPLETE BATCH COUNTS:when the Monitoring Parameter PRODUCT BTH COUNT≧MAX PRODUCT,there is a alarm in output terminals,you can reset the output terminals or reset the monitoring parameter PRODUCT BTH COUNT.

XII. Caution

1) When using the controller, the shell must be solid grounding.

2) The controller could be used after connected to the cooling water, and ensure adequate cooling water flow and pressure .To regularly (one month a time) check the water cool system.

3) Don't open the controller, and touch the parts in the box while turning on electricity. It could lead to an electric shock (Box on a high-voltage 600V).

4) Please note that the controller is also available on the internal energy storage capacitors close to 30V voltage exist while cutting off power supply and internal indicator light to turn off. Please pay special attention to safeguarding the controller.

5) Check their internal wiring and control board wiring, make sure to cut off power supply.

6) Don't allow hand-touch control board components, otherwise the components may be damaged by electrostatic.

7) Don't allow hand-touch IGBT, otherwise the components may be damaged by electrostatic.

Appendix 1, Welding Control Program Parameter Table

	Parameter Name	Value Scope	
0	START INHIBIT	ON/Inhibit to start ;OFF/Allow to Start	
1	PULSE START	ON/Plus Start Mode; OFF/General Start Mode	
2	INITIAL SQUEEZE	0~9999ms	
3	SQUEEZE	0~9999ms	
4	1.HEAT MODE	PHA/Constant phase angle mode； KSR/Constant current control mode； KUR/Constant voltage mode	
5	1.WELD TIME	0~9999ms	
6	1.HEAT	0~99.99KA [%] Current mode unit is KA， Voltage & Lasting Angle Mode unit is %	
7	1.COOL TIME	0-9999ms	
8	2.HEAT MODE	PHA/Constant phase angle mode； KSR/Constant current control mode； KUR/Constant voltage mode	
9	UP/DOWN CONTROL	ON/ UP/DOWN function effectively； OFF/ UP/DOWN function void；	
10	UPSLOPE TIME	0-9999ms	UP/DOWN is effective at ON
11	UPSLOPE HEAT	0-99.99KA [%]	

12	2.WELD TIME	1-9999ms	
13	2.HEAT	0-99.99KA [%]	
14	DOWN SLOPE TIME	0-9999ms	UP/DOWN is effective at ON
15	DOWNSLOPE HEAT	0-99.99KA [%]	
16	2.COOL TIME	0-9999ms	
17	HEAT2 PULSE	1-99	
18	3.COOL TIME	0-9999ms	
19	3.HEAT MODE	PHA/Constant phase angle mode； KSR/Constant current control mode； KUR/Constant voltage mode	
20	3.WELD TIME	0-9999ms	
21	3.HEAT	0-99.99KA [%]	
22	HOLD TIME	1-9999ms	
23	OFF TIME	0-9999ms	
24	TRF TURNS RATIO	1.0-199.9	
25	REPEAT/SINGLE	ON/OFF	
26	HOLD END TIME	40~1000ms, Hold end time of weld complete Signal in single spot Welding	
27	UNDEFINED		
28	MEASURE DELAY	0-99ms	Only effective on Sub-Current Feedback

29	TRAIL CURRENT	ON/OFF ON/Tailing Current effective detection； OFF/ Tailing Current null and void detection	Only effective on Sub-Current Feedback
30	REWELD ON/OFF	ON/OFF ON/When Current is lower reference current, Re-welding is allowed； OFF/ When Current is lower reference, alarming directly, Re-Welding is not allowed；	
31	REWELD NUMBER	1-99 the number of continuously re-welding spots under the condition of Re-Weld allowed	
32	Seam 2 current		
33	Seam 3 current		
34	Seam 4 current		
35	1.HEAT MONITOR	ON/OFF ON/Monitoring effective OFF/ Monitoring invalid	
36	1.HEAT REFERENCE	0-99.99KA; Monitoring Current Reference Value	
37	1.HEAT LIMIT+	0-100.0% ； in the reference value based on the settings to allow the scope of transfinite	
38	1.HEAT P.LIMIT-	0-100.0% ； in the reference value	

		based on the set due to limited the scope of license	
39	1.HEAT A.LIMIT-	0-100.0%； Set alarm owed to limit the scope on the basic of Reference Value Allowing 1-99 Continuous low limit Solder Joints between Allowed Sub-Terminal Value & Alarming Sub-Terminal Value	
40	2.HEAT MONITOR	ON/OFF	
41	2.HEAT REFERENCE	0-99.99KA	
42	2.HEAT LIMIT+	0-100.0%	
43	2.HEAT P.LIMIT-	0-100.0%	
44	2.HEAT A.LIMIT-	0-100.0%	
45	3.HEAT MONITOR	ON/OFF	
46	3.HEAT REFERENCE	0-99.99KA	
47	3.HEAT LIMIT+	0-100.0%	
48	3.HEAT P.LIMIT-	0-100.0%	
49	3.HEAT A.LIMIT-	0-100.0%	
50	C.C.LOWER COUNT	Allowing N Continuous Current lower counts between P.LIMIT- &A.LIMIT-, it will give an alarm if exceeded	
51	BASE PRESSURE	0-100.0%； Percentage to the Largest Pressure	

52	PRESSURE PROFILE	ON/OFF ON/Setup Pressure Profile by needs OFF/Cannot setup Pressure Profile	
53	P.STEP1 TIME	0-9999ms ； Time of Pressure Stepper section 1	Pressure Profile is effective as ON
54	P.STEP1 PRESSURE	0-100.0% ； Percentage of Pressure of Stepper section 1 to the Largest Pressure	
55	P.STEP2 TIME	0-9999ms ；	
56	P.STEP2 PRESSURE	0-100.0% ；	
57	P.STEP3 TIME	0-9999ms ；	
58	P.STEP3 PRESSURE	0-100.0% ；	
59	P.STEP4 TIME	0-9999ms ；	
60	P.STEP4 PRESSURE	0-100.0% ；	
61	P.STEP5 TIME	0-9999ms ；	
62	P.STEP4 PRESSURE	0-100.0% ；	
63	P.STEP6 TIME	0-9999ms ；	
64	P.STEP6 PRESSURE	0-100.0% ；	
65	P.STEP7 TIME	0-9999ms ；	
66	P.STEP7 PRESSURE	0-100.0% ；	

67	P.STEP8 TIME	0-9999ms ;	
68	P.STEP8 PRESSURE	0-100.0% ;	
69	P.STEP9 TIME	0-9999ms ;	
70	P.STEP9 PRESSURE	0-100.0% ;	
71	P.STEP10 TIME	0-9999ms ;	
72	P.STEP10 PRESSURE	0-100.0% ;	
73	UNDEFINED		
74	UNDEFINED		
75	HEAT STEP ON/OFF	ON/OFF	
76	HEAT STEP 1. % I	100.0%; Percentage of Current in every Stepper section to the total Current Increment	Stepper Control Function is effective as ON
77	HEAT STEP 1. % C	100.0%; Percentage of welding spots in every Stepper section to the total welding spots during the whole Increase process	
78	HEAT STEP 2. % I	100.0%	
79	HEAT STEP 2. % C	100.0%	
80	HEAT STEP 3. % I	100.0%	
81	HEAT STEP 3. % C	100.0%	

82	HEAT STEP 4. % I	100.0%	
83	HEAT STEP 4. % C	100.0%	
84	HEAT STEP 5. % I	100.0%	
85	HEAT STEP 5. % C	100.0%	
86	HEAT STEP 6. % I	100.0%	
87	HEAT STEP 6. % C	100.0%	
88	HEAT STEP 7. % I	100.0%	
89	HEAT STEP 7. % C	100.0%	
90	HEAT STEP 8. % I	100.0%	
91	HEAT STEP 8. % C	100.0%	
92	HEAT STEP 9. % I	100.0%	
93	HEAT STEP 9. % C	100.0%	
94	HEAT STEP 10. % I	100.0%	
95	HEAT STEP 10. %C	100.0%	
96	HEAT STEP UP	999.9%; the total increment in Current Stepper relative to Current Set Value.	
97	PRESSURE STEP UP	999.9%; the total Pressure increment in the pressure stepper relative to the Basic	

		Pressure Value.	
98	STEP END NOTICE	0-99； The set value shows that at the end of Current increase the first N Points will notice the ending.	
99	STEP UP COUNT	1-9999； Total amount of weld spots during the Electrode repair.	
100	Start Increment	999.9%； //Closed	
101	Amount of Start Phases & Points	0-9999； // Closed	
102	EL.REPAIR ON/OFF	ON/OFF	
103	EL.REPAIR COUNT	0-9999； The total times of Electrode repair.	Electrode Repair Function is effective as ON
104	Grinding % I	999.9%	
105	Grinding % P	999.9%	
106	EL.REPAIR NOTICE	0-99; Before the last repair electrode ends, N points advance notice.	
107	UNDEFINED		
108	UNDEFINED		
109	UNDEFINED		
110	UNDEFINED		
111	UNDEFINED		
112	FREELY P.OUTPUT	ON/OFF	

113	OFF1 TIME	1-9999ms	Effective only if the Programmable Function is effective
114	ON1 TIME	0-9999ms	
115	OFF2 TIME	0-9999ms	
116	ON2 TIME	0-9999ms	
117	OFF3 TIME	0-9999ms	
118	ON3 TIME	0-9999ms	

Appendix 2, Monitoring Parameters Table

1	WELD COUNT	Show the Current Added up amount of weld spots.	
2	STEP POINTER		
3	STEP COUNT		
4	EL.REPAIR COUNT		
5	VOLTAGE OF CAPACITOR	Present Voltage of Capacitor	
6	VOLTAGE OF ELECTRODE	Present Voltage of Electrode	
7	HEAT1 C.VOLTAGE	Capacitor Voltage of Heat 1	
8	HEAT1.S.VOLTAGE	Electrode Voltage of Heat1	
9	HEAT1 P.CURRENT	Primary Current of Heat1	
10	HEAT1 S.CURRENT	Sub-current value of Heat 1	
11	HEAT1 TIME	Time of Heat1	
12	HEAT1 PHASE	The Actual Turn-on Ratio of Heat 1	
13	HEAT1 TRAIL TIME	Current Tailing Time of Heat 1	
14	HEAT2 C.VOLTAGE		
15	HEAT2.S.VOLTAGE		
16	HEAT2 P.CURRENT		
17	HEAT2 S.CURRENT		
18	HEAT2 TIME		

19	HEAT2 PHASE		
20	HEAT2 TRAIL TIME		
21	HEAT3 C.VOLTAGE		
22	HEAT3.S.VOLTAGE		
23	HEAT3 P.CURRENT		
24	HEAT3 S.CURRENT		
25	HEAT3 TIME		
26	HEAT3 PHASE		
27	HEAT3 TRAIL TIME		
28	WELD MODI COUNT		
29	PRODUCT BTH COUNT		

Appendix 3, Schedule Selection

Schedule Selection Terminal input						0 AS 1	0 AS 1
X11-4	X11-5	X11-6	X11-7	X11-8	X11-9	1111	0000
32	16	8	4	2	1	Schedule	Schedule
						Invalid	1
					x	1	2
				x		2	3
				x	x	3	4
			x			4	5
			x		x	5	6
			x	x		6	7
			x	x	x	7	8
		x				8	9
		x			x	9	10
		x		x		10	11
		x		x	x	11	12
		x	x			12	13
		x	x		x	13	14
		x	x	x		14	15
		x	x	x	x	15	16
	x					16	17
	x				x	17	18
	x			x		18	19
	x			x	x	19	20
	x		x			20	21
	x		x		x	21	22
	x		x	x		22	23
	x		x	x	x	23	24
	x	x				24	25
	x	x			x	25	26
	x	x		x		26	27
	x	x		x	x	27	28
	x	x	x			28	29
	x	x	x		x	29	30
	x	x	x	x		30	31
	x	x	x	x	x	31	32
x						32	33
x					x	33	34
x				x		34	35
x				x	x	35	36
x			x			36	37

x			x		x	37	38
x			x	x		38	39
x			x	x	x	39	40
x		x				40	41
x		x			x	41	42
x		x		x		42	43
x		x		x	x	43	44
x		x	x			44	45
x		x	x		x	45	46
x		x	x	x		46	47
x		x	x	x	x	47	48
x	x					48	49
x	x				x	49	50
x	x			x		50	51
x	x			x	x	51	52
x	x		x			52	53
x	x		x		x	53	54
x	x		x	x		54	55
x	x		x	x	x	55	56
x	x	x				56	57
x	x	x			x	57	58
x	x	x		x		58	59
x	x	x		x	x	59	60
x	x	x	x			60	61
x	x	x	x		x	61	62
x	x	x	x	x		62	63
x	x	x	x	x	x	63	64

Fig.1 Main Board Terminal Wiring Diagram

Single output has two style:point and PNP.We most use point output.

Point output:

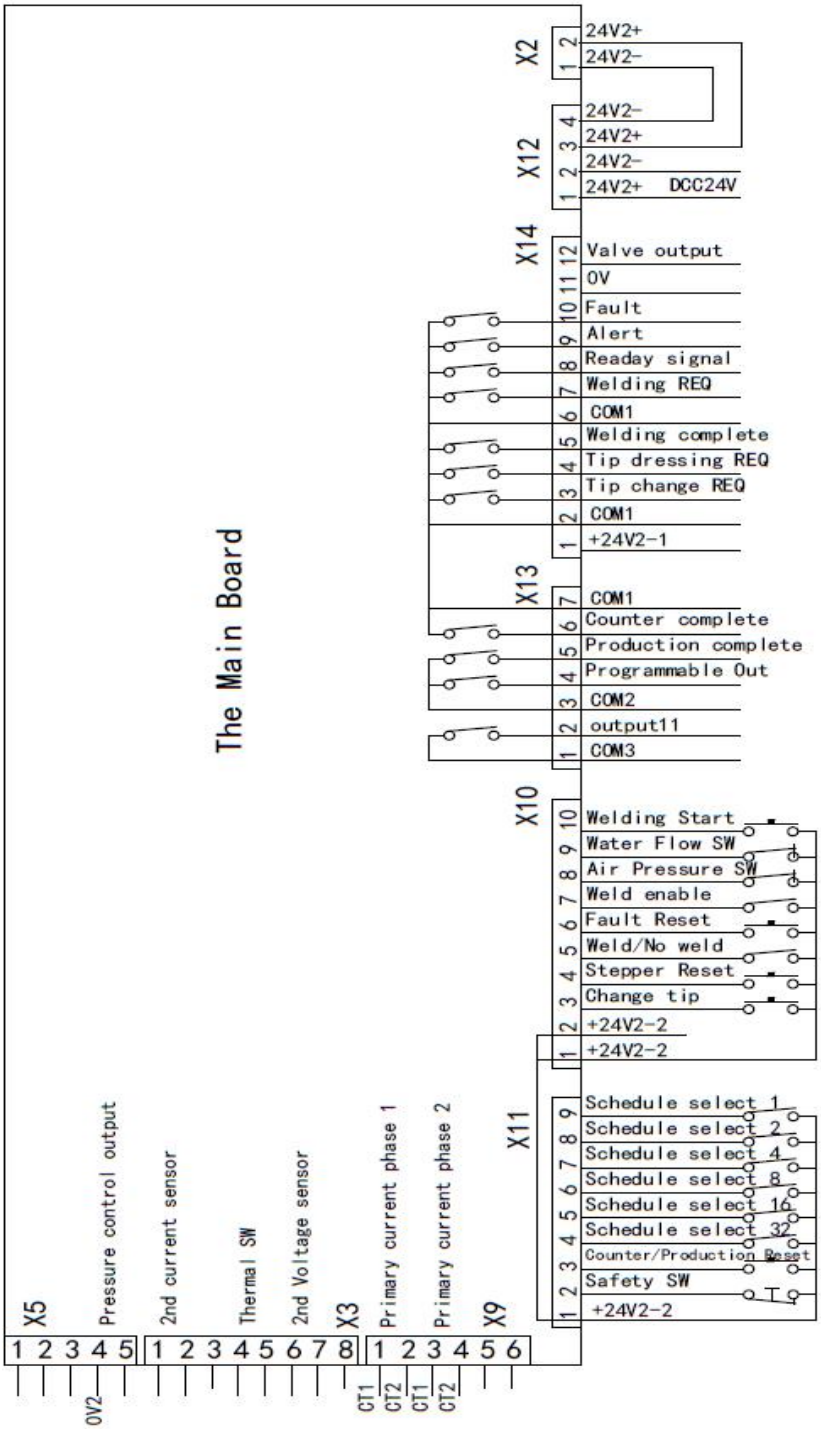

PNP OUTPUT:

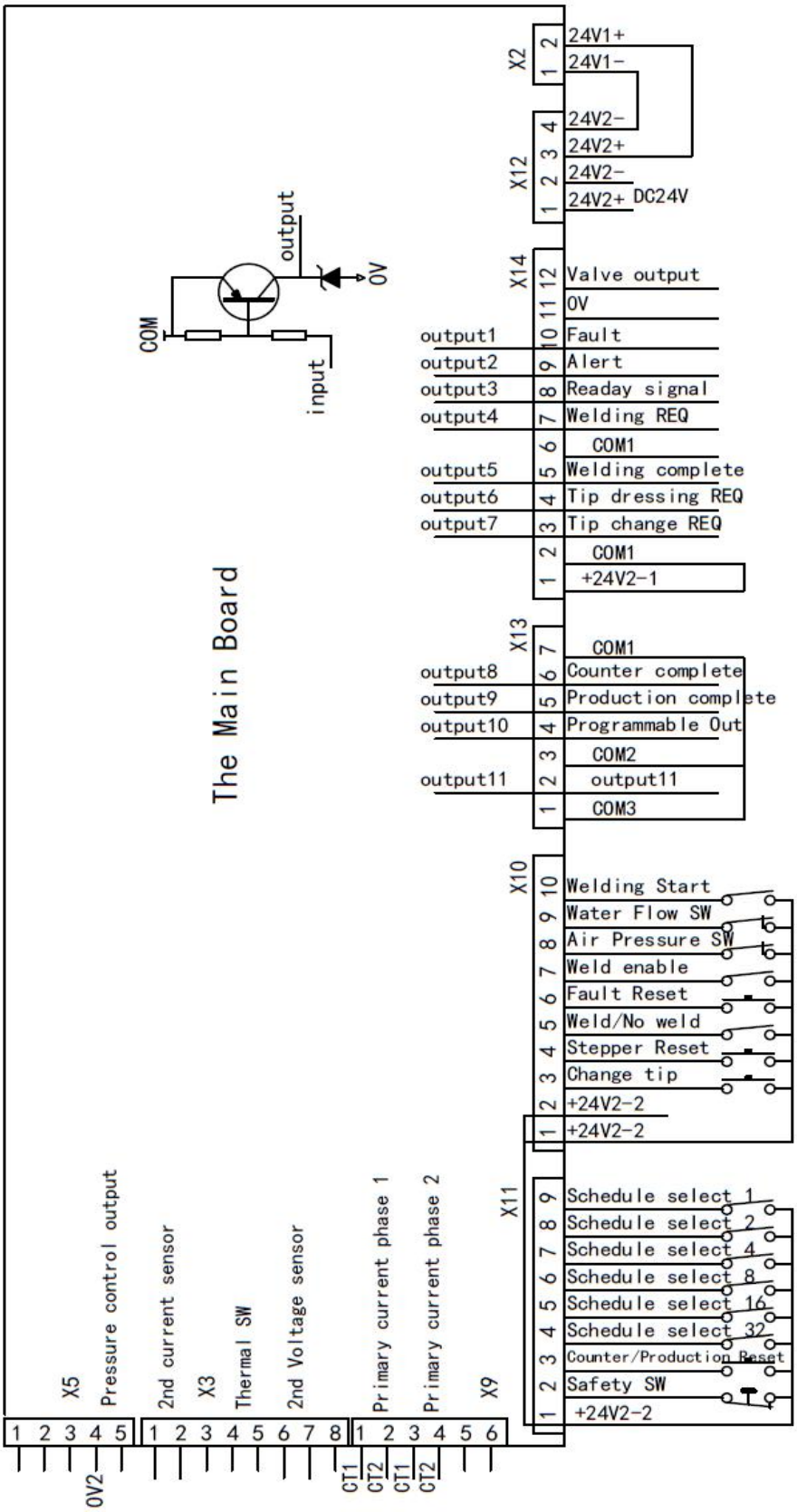
The Main Board
COM
output
input
0V
X2
24V1+
24V1-
X12
24V2-
24V2+
24V2-
24V2+
DC24V
X14
Valve output
0V
output1
Fault
output2
Alert
output3
Readay signal
output4
Welding REQ
COM1
output5
Welding complete
output6
Tip dressing REQ
output7
Tip change REQ
COM1
+24V2-1
X13
COM1
output8
Counter complete
output9
Production complete
output10
Programmable Out
COM2
output11
output11
COM3
X10
Welding Start
Water Flow SW
Air Pressure SW
Weld enable
Fault Reset
Weld/No weld
Stepper Reset
Change tip
+24V2-2
+24V2-2
X11
Schedule select 1
Schedule select 2
Schedule select 4
Schedule select 8
Schedule select 16
Schedule select 32
Counter/Production Reset
Safety SW
+24V2-2
X5
Pressure control output
0V2
2nd current sensor
X3
Thermal SW
2nd Voltage sensor
Primary current phase 1
CT1
CT2
Primary current phase 2
CT1
CT2
X9

Fig.2 Controller and Transformer Wiring Diagram

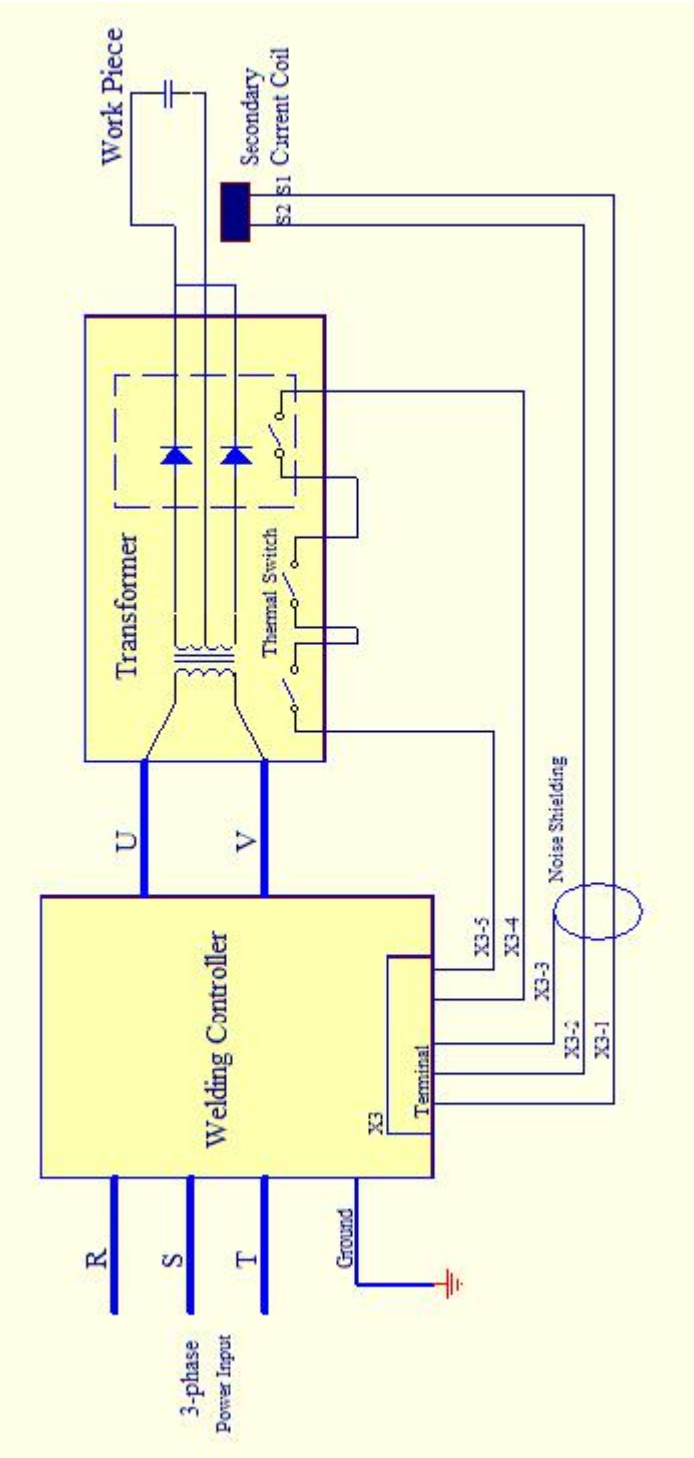

Fig.3 Valve and Fan Power